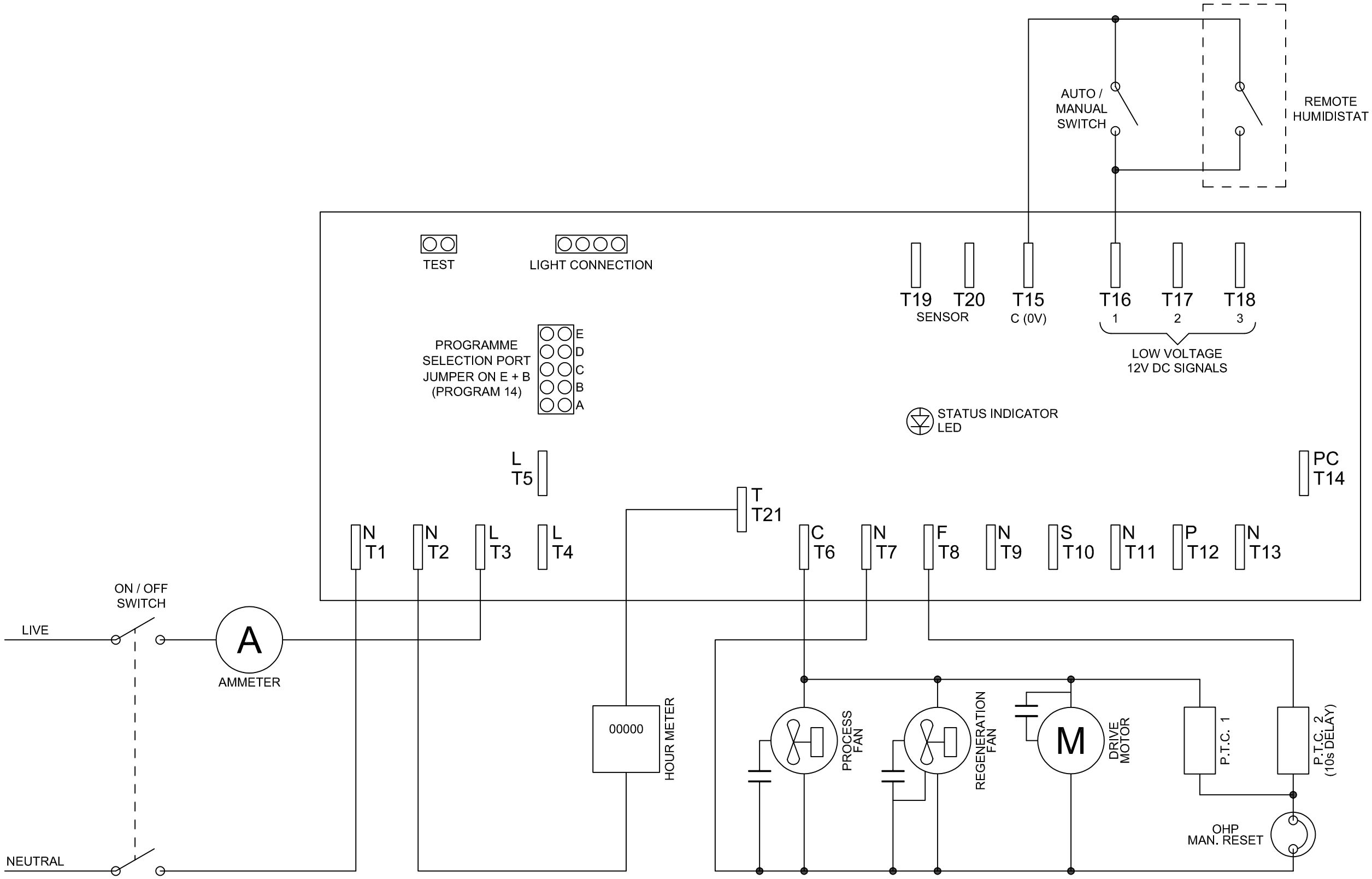

ISSUE	DATE	AMENDMENTS
A	05/11/24	ORIGINAL

© 1997

BISHOP AUCKLAND
Co. DURHAM
ENGLAND

TITLE
DD400-E 220V / 60Hz - SCHEMATIC

3RD ANGLE PROJECTION

DO NOT SCALE
IF IN DOUBT ASK

DIMENSIONS IN m.m.
TOLERANCES UNLESS OTHERWISE STATED

0.	±	1
0.0	±	0.25
0.00	±	0.05
ANGULAR	±	0.5 DEGREE

MATERIAL
N/A

FINISH
N/A

DRAWN : W DAGLISH

CAD SCALE : 1/1

DRG.NO.
5020586

SHEET
1 OF 1

A3