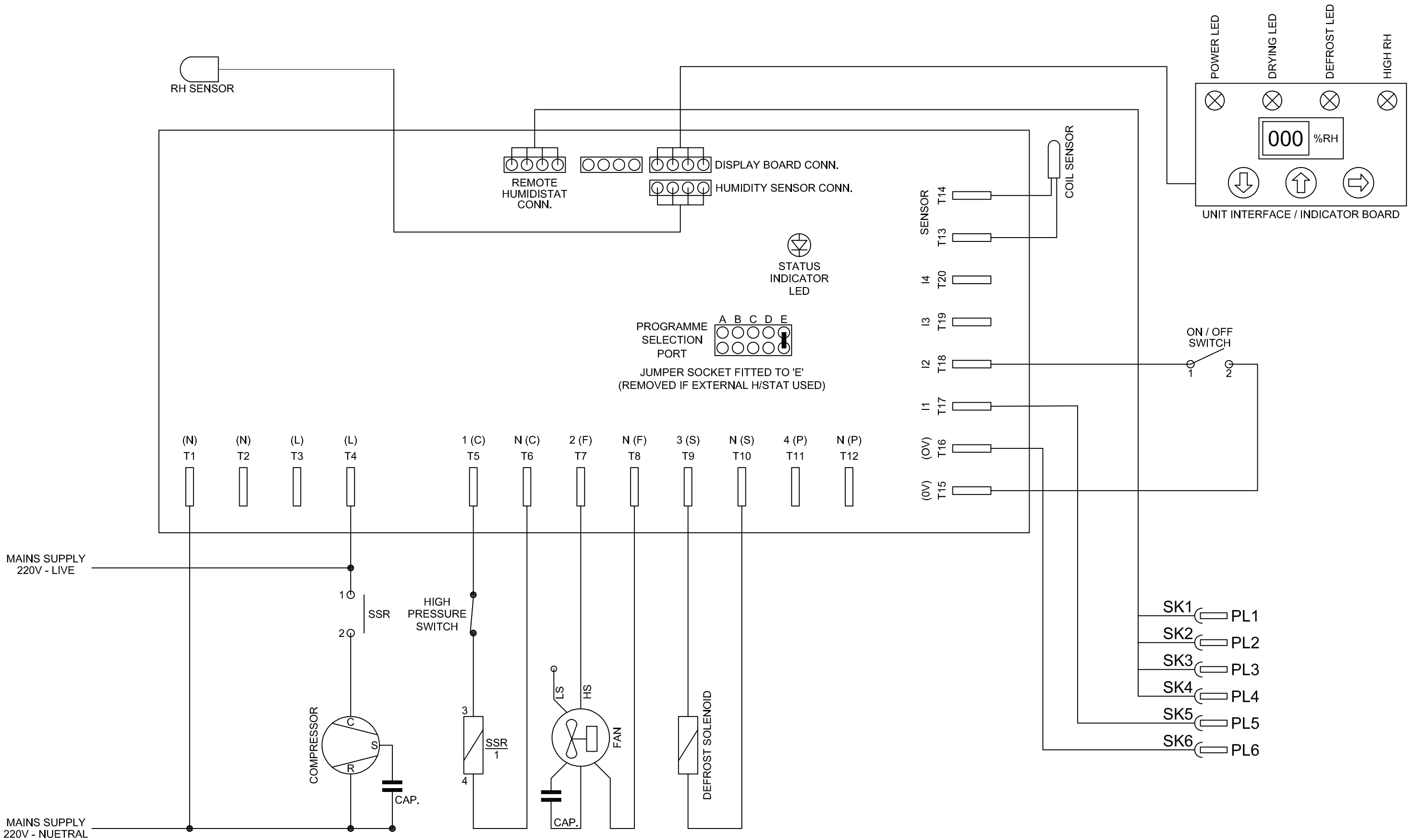


| ISSUE | DATE | AMENDMENTS |
|---|---|---|
| 1 | 11/07/25 | PROTOTYPE |
| | | |
| | | |
| | | |
| | | |
| | | |

© 1997

BISHOP AUCKLAND
Co. DURHAM
ENGLAND

TITLE
PD220-D - 220V / 60Hz - WIRING SCHEMATIC

3RD ANGLE PROJECTION

DO NOT SCALE
IF IN DOUBT ASK

DIMENSIONS IN m.m.
TOLERANCES UNLESS OTHERWISE STATED

| | |
|---|---|
| 0. | ± 1 |
| 0.0 | ± 0.25 |
| 0.00 | ± 0.05 |
| ANGULAR | ± 0.5 DEGREE |

MATERIAL
N/A

FINISH
N/A

DRAWN : W DAGLISH

CAD SCALE : N/A

DRG.NO.
5020603

SHEET
1 OF 1

A3