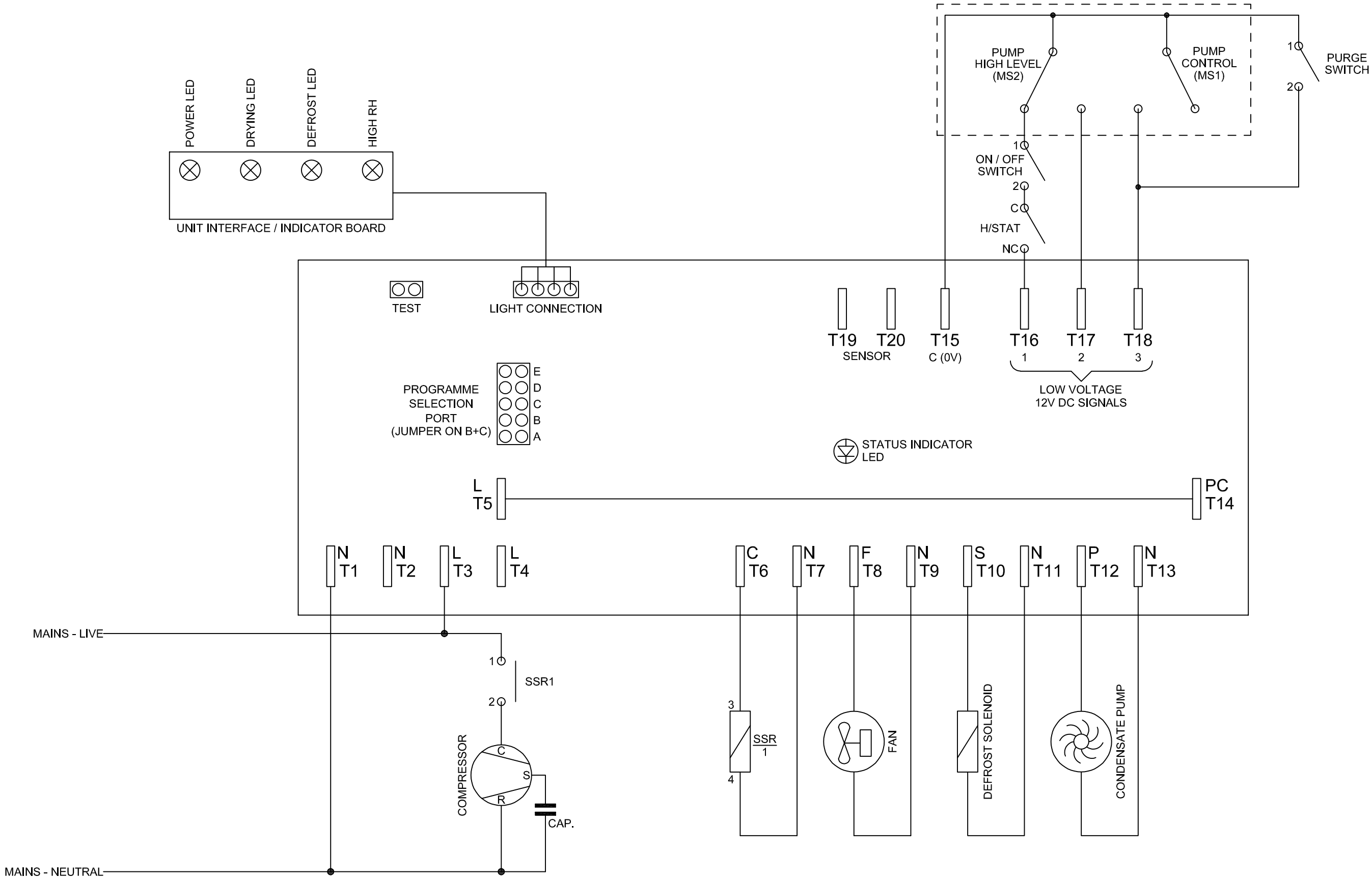

ISSUE	DATE	AMENDMENTS
1	28/01/26	ORIGINAL

© 1997

BISHOP AUCKLAND
Co. DURHAM
ENGLAND

TITLE: K100P - 110V / 60Hz

3RD ANGLE PROJECTION

DO NOT SCALE
IF IN DOUBT ASK

DIMENSIONS IN m.m.
TOLERANCES UNLESS OTHERWISE STATED

0.	±	1
0.0	±	0.25
0.00	±	0.05
ANGULAR	±	0.5 DEGREE

MATERIAL: N/A

FINISH: N/A

DRAWN: W DAGLISH

CAD SCALE: 1/1

DRG.NO. 5020611

SHEET 1 OF 1

A3